DE1_Appendix III

MICROGRIDS

Large Scale Integration of Micro-Generation
To Low Voltage Grids

WORK PACKAGE E

Report for Task TE1

LOW VOLTAGE EARTHING IN THE UK

DRAFT Issue No 2

14th May 2004

Nilanga Jayawarna
Nick Jenkins

UMIST

Table of Contents

Table of Contents 2
Introduction 3
Supply system earthing 3
Equipment earthing 4
Earthing methods 4
Earthing applications 5
1. Earthing of generating plants 5
2. Earthing of power stations and sub-stations 5
3. Earthing of consumers' electrical installations 5
4. Transformer earthing 6
5. Lightning Protection and earthing 6
6. Earthing of data processing installations 6
LV Distribution System 6
Equipotential bonding 7
Earth Fault Loop impedance 9
Protection Schemes 11
References 12
Appendix A: Earthing systems 14
1. TT system 14
2. TN-C system 15
3. TN-S system 15
4. TN-C-S system 16
5. IT system 17
Appendix B : Regulation 413-02-04 of BS7671 18
Appendix C : Electricity Safety, Quality and Continuity Regulations 2002 (ESQ&C2002) 21

Introduction

There are many legislative documents that are mandatory on this subject. They provide information on the statutory regulations and design data required for earthing of the low voltage network in the UK. The main documents are listed below [1-6].

1. Electricity Safety, Quality and Continuity Regulations 2002 (ESQ&C2002) – in force
2. "Electricity Supply Regulations 1988" (ESR88) – superseded by ESQ&C2002
3. "Electricity at Work Regulations 1989" (EWR89)
4. "IEE Wiring Regulations 16th Edition" (re-issued as BS 7671)
5. BS 7430 ("Code of practice for earthing")

In Electrical Engineering, the *Earth* is defined as 'the conductive mass of earth, whose electrical potential at any point is conveniently taken as zero'. All metalwork in electrical and non-electrical systems is connected to earth (i.e. grounded) in order to prevent serious electric shocks to humans or livestock.

The three main objectives for earthing are safety, protection and function [7]. *Safety* relates to people and is achieved by controlling the voltage levels and their duration under fault conditions. *Protection* relates to buildings, plant and equipment and is achieved by ensuring that the fault currents would result in effective protection reaction times and by voltage limitation. *Function* relates to the correct and precise operation of equipment and is achieved by providing a constant and noise free reference bus.

Earthing of an electrical system could be broadly categorised in to two according to the reason for its earthing [8]. They are System earthing and Equipment earthing.

Supply system earthing

It is a statutory requirement in UK for all public Low Voltage (LV) networks to be solidly connected to earth (Regulation 4-8 of ESR88 and EWR89). This is done in order to limit the potential of the current-carrying conductors with respect to earth and is essential for the proper functioning of the system. Earthing prevents the potential of a conductor rising to a level that is inconsistent with its insulation level. The relative

size of phase and neutral conductors and the size of the main equipotential bonding conductors in the consumer's installations are given in BS7671.

However earthing of a supply system is not essential for safe operation and unearthed public systems are in operation, typically in Norway [9]. Good grounding does not offer any particular advantage to better system performance according to a study by ABB [10].

Industrial and commercial distribution systems have dissimilar loads, characteristics and operating requirements from the utility power systems. As such the earthing practices of the two systems are different from each other too. Solidly grounded systems are used for general production loads while high-resistance grounding is common for continuous process plants [11].

Equipment earthing

Equipments are connected to earth to limit the potential difference between exposed conductive parts, which provides protection from shock through indirect contact for humans and livestock. The purpose of equipment earthing is to ensure the operation of protective devices in the event of an earth fault.

Earthing methods

Connecting metalwork to earth maintains such parts at zero potential and also provides a path for earth leakage current. There are several methods for making a connection to earth and types of earth electrodes used are as follows:

i. Earth rods or pipes
ii. Earth tapes or wires
iii. Earth plates
iv. Underground structural metalwork embedded in foundations
v. Welded metal reinforcement of concrete embedded in the earth
vi. Lead sheaths and other metal coverings of cables
vii. Other suitable underground metalwork

The factors affecting the performance of earth electrodes are listed below

i. Resistivity of soil or infill material in which it is buried

ii. Size and shape of earth electrode

iii. Its connection to the system

iv. Current density and its surface

v. Ground potential in its vicinity

Earthing applications

BS 7430 details the applications of the methods of earthing to twelve locations and installations, six of which are outlined below.

1. Earthing of generating plants

Generators are earthed to limit the potential of live conductors and as protection against indirect contact. The common practice for LV networks is to directly earth the star point of the generator. In fact earthing of generators intended to operate in parallel with the public supply system, is an intrinsic part of the UK statutory requirement of earthing the public low voltage distribution network. This is also essential if the generator is to operate islanded [7,12].

2. Earthing of power stations and sub-stations

At each distribution sub-station there are two earthing systems associated with the 11kV and the LV networks. The 11kV earthing system ensures that the protection operates for a fault between any 11kV conductor and earth. The LV neutral is earthed at the source of voltage, i.e. the distribution transformer. The LV neutral earth provides a return path for earth fault currents on the LV network in addition to allowing the 11kV protection to clear a transformer inter-winding fault [13].

According to ESR88, high and low voltage systems shall be separately earthed and may only be interconnected if the resistance of their combined earth electrode is less than or equal to 1Ω. This is to minimise the risk of an earth fault on the HV system raising the voltage of the LV neutral [7].

3. Earthing of consumers' electrical installations

Contact with exposed conductive parts made live by a fault and which may result in electric shock, is called *indirect contact*. Protection against indirect contact

shock hazard is essential for consumers' installations. This depends on earthing for its efficiency and is described in detail in a latter section of this document.

4. Transformer earthing

The distribution transformer is associated with both the HV and LV earthing systems. Supply cable screens and armouring, transformer housing, frame, screens and cores must all be earthed on to the high voltage system. The star point of the transformer secondary will be connected to the neutral and protective conductors of the LV network and to the earthing conductor of the LV earth electrode system.

5. Lightning Protection and earthing

The lightning protection scheme may consist of down conductors terminating in earth electrodes or may use structural steel work with or without additional electrodes. The resistance of the combined earth termination network must not exceed 10Ω.

The lightning protection network shall be adequately bonded to the electrical system and the size of the bonding conductor shall not exceed that of the earthing conductor.

6. Earthing of data processing installations

Each exposed-conductive-part of data processing and telecommunication installation should be connected to the main earthing terminal [14].

LV Distribution System

A LV distribution system may be identified according to its earthing system. The IEE Regulations define an Earthing system as an electrical system consisting of a single source of electrical energy and an installation. Five types of earthing systems are identified in the regulations, depending upon the relationship of the source, and of exposed-conductive-parts of the installation to earth.

The four earthing systems in common practice are TT, TN-C, TN-S and TN-C-S. For the most part, LV distribution system will be in the form TN-S i.e. separate neutral and protective conductors. The incoming supply is more likely to be in the form TN-C

i.e. combined neutral and protective conductor (PEN) with multiple earthing (PME). Unless a distribution transformer is interposed between the supply and the distribution system, the TN-C becomes effectively a TN-C-S within the consumer premises.

These are defined using the four letters T, N, C and S and they stand for:

T	terre (French for earth), which means a direct connection to earth
N	neutral
C	combined
S	separate

These letters are grouped to form the classification of each type of a system. The position of the letters in such a classification describes the earthing system in the following manner. The first letter denotes how the supply source is earthed while the second letter denotes how the metalwork of an installation is earthed. The third and fourth indicate the functions of neutral and protective conductors.

The other earthing system is IT system, which is extremely rare. These earthing systems are illustrated and described in detail in Appendix A.

Equipotential bonding

One method of providing protection against indirect contact is by *earthed equipotential bonding and automatic disconnection of supply*. Equipotential bonding entails maintaining various *exposed-conductive parts* (all metalwork associated with electrical apparatus and systems that may become live under fault conditions) and *extraneous-conductive parts* (all metalwork liable to introduce a potential, generally earth potential) at the same potential.

Supplementary bonding is carried out in situations where the resistance of the body is low, (when a person is wet, may have large areas of close bodily contact or is hot and sweaty) to reduce the touch voltages or when the protection scheme cannot achieve the prescribed disconnection times.

[**Regulation 413-02-04 of BS7671**: "*The characteristics of each protective device for automatic disconnection, the earthing arrangements for the installation and the*

relevant impedance of the circuit concerned shall be co-ordinated so that during an earth fault the voltages between simultaneously accessible exposed and extraneous-conductive-parts occurring anywhere in the installation shall be of such magnitude and duration as not to cause danger".]

The conductors used in such connections are called *protective conductors* and they are used for connecting together any of the following parts; exposed-conductive parts, extraneous-conductive parts, the main earthing terminal, earth electrode(s), the earthed point of the source or an artificial neutral.

Protective conductors can be sub-divided as follows;

1. *Circuit protective conductors*: for connecting exposed conductive parts to the main earthing terminal
2. *Main equipotential bonding conductors*: for bonding together main incoming services, structural steelwork, etc,
3. *Supplementary bonding conductors*: for bonding together taps, radiators, etc. and exposed conductive parts.

The role of protective conductors in different earthing arrangements is illustrated in the example given in Figure 1.

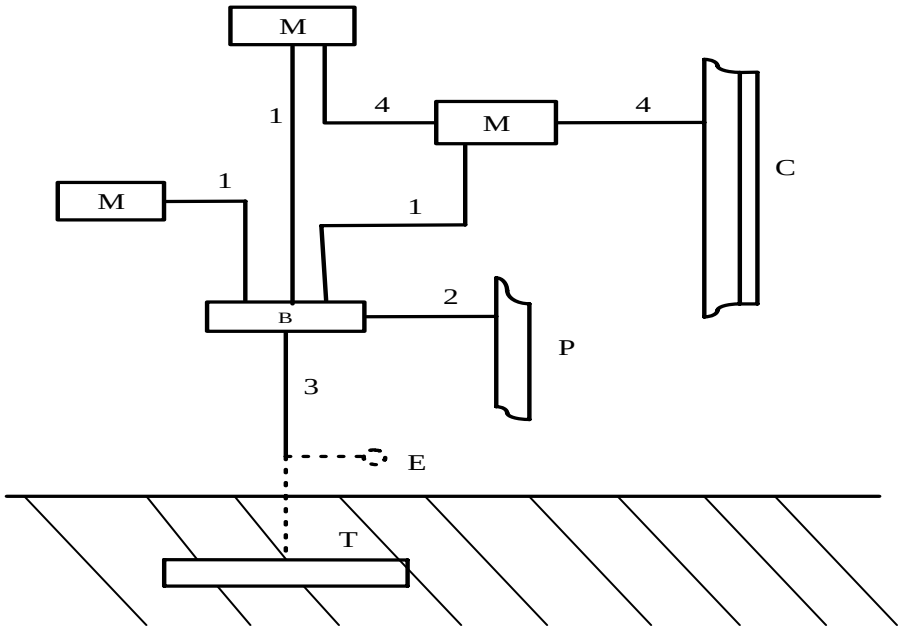

Figure 1: An example of earthing arrangements and protective conductors

1,2,3,4 = Protective conductors

- 1 = Circuit protective conductor
- 2 = Main equipotential bonding conductor
- 3 = Earthing conductor
- 4 = Supplementary equipotential bonding conductors (where required)

B = Main earthing terminal

M = exposed conductive part

C = Extraneous conductive part

P = Main metallic water pipe

T = Earth electrode (TT and IT systems)

E = Other means of earthing (TN systems)

This bonding ensures that during an earth fault, the voltages between simultaneously accessible exposed and extraneous conductive parts occurring anywhere in the installation will be at a substantially equal potential.

If the resistance of the earth return path is low, protection should act fast enough to prevent any danger. The resistance of such an earth return path depends upon the earthing system.

Bonding of metalwork in electrical and non-electrical systems to earth prevents risk of serious electric shock by maintaining all the metalwork at the same potential and by providing a path for earth leakage current to operate the circuit protection. The path for the leakage currents is via the earth itself for TT and IT systems or by a metallic return path in TN systems.

Earth Fault Loop impedance

The speed of operation of circuit protection depends on the magnitude of fault current, which in turn depends on the impedance of the earth fault loop path. This path consists of:

1. The circuit protective conductor (CPC)
2. The consumer’s earthing terminal and earth conductor

3. The return path, either metallic or earth
4. The earthed neutral of the supply transformer
5. The transformer winding
6. The phase conductor from the transformer to the fault

Figure 2 shows this path in a simplified manner. The impedance of the transformer winding is negligible in relation to circuit impedances and is ignored.

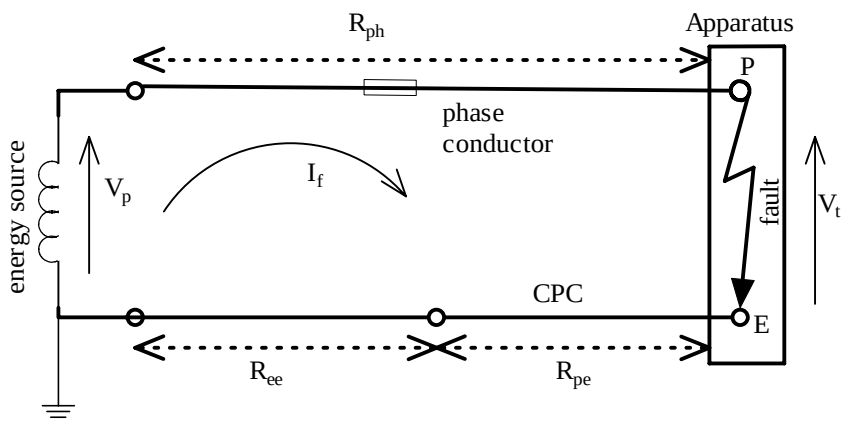

Figure 2: Earth fault loop impedance

Where

Z_s = Total earth fault loop impedance

R_{ph} = Resistance of the phase conductor (from energy source to fault)

R_{pe} = Resistance of the CPC

R_{ee} = Resistance of the external protective conductor/ earth electrode

I_f = Earth fault current

V_p = Supply phase voltage

V_t = Touch voltage at appliance

U_0 = Nominal voltage to earth (usually 240V)

$$Z_s = R_{ph} + R_{pe} + R_{ee}$$

$$I_f = U_0 / Z_s$$

The fault current, I_f, is used to operate protection devices to disconnect the supply system from the defective equipment. This current can be restricted by the introduction of impedance in to this loop. Limiting the fault current helps to keep the fault voltages within safe boundaries.

If a phase conductor comes in to contact with the metalwork of equipment in an installation, a touch voltage would arise and this is a function of earth fault loop impedance (eqn1). *Touch voltage* is the voltage difference between the exposed conductive parts of two items of equipment during this fault.

$$V_t = V_p \times \left(\frac{R_{pe} + R_{ee}}{R_{ph} + R_{pe} + R_{ee}} \right) \rightarrow (eqn1)$$

This concept of the effect of earth fault loop impedance on touch voltage together with touch voltage/persistent time curve contained in IEC Publication 364 has been used to derive the impedances listed in Tables 41A-D of Regulation 413 of BS7671.

Due to the low source voltage and relatively high earth leakage currents, the worst-case touch voltages during an earth fault in LV networks are maintained at an acceptable level in comparison to their duration [15].

Protection Schemes

At the sub circuit end, fuses and miniature circuit breakers provide earth fault protection. They are graded to clear low impedance earth faults by automatic disconnection in a maximum time prescribed in Regulation 413 of BS 7671. The operating time is 0.4 seconds for a TN system while the protection of a TT system will operate when the potential of the earth terminal reaches 50 volts to true earth. More details are to be found in Appendix B.

At the energy source end, protection is provided usually by current transformer (CT) sensing. This operates through a relay with defined characteristics to trip a circuit breaker. Restricted and unrestricted zone, long-time standby and directional protection may be achieved by various CT placements and relay selection.

References

1. Statutory Instrument 2002 No. 2665, "*The Electricity Safety, Quality and Continuity Regulations 2002*", Downloaded from the website http://www.legislation.hmso.gov.uk/si/si2002/20022665.htm on 05-05-2004.
2. Statutory Instrument 1988 No. 1057, "The Electricity Supply Regulations 1988", Downloaded from the website http://www.legislation.hmso.gov.uk/si/si1988/Uksi_19881057_en_1.htm in December 2003.
3. Statutory Instrument 1989 No. 635, "Electricity at Work Regulations 1989", Downloaded from the website http://www.legislation.hmso.gov.uk/si/si1989/Uksi_19890635_en_1.htm in December 2003.
4. IEE Wiring Regulations, "*Regulations for Electrical Installations*", Sixteenth Edition, 1991, The Institution of Electrical Engineers.
5. Brian Scadden, "*IEE Wiring Regulations Explained and Illustrated*", Second Edition, 1991.
6. Rogers, W J S., Notes on "Protection of Distribution Systems with Distribution Generattion", UMIST MSc Module: Integration of Distributed Generation, 8th –12th March 2004.
7. Waknell, R D., "General overview of Earthing Systems in current practice", Earthing Systems – which path to follow?", Conference proceedings, Manchester, July 1993. ERA Report 93-0432
8. Stockting, J., "An overview of BS 7430: 1991 – Code of Practice for Earthing", Earthing Systems – which path to follow?", Conference proceedings, Manchester, July 1993. ERA Report 93-0432
9. Latimer, D W M., "Earthing and Bonding – What does it do?", Earthing Solutions – Standards, Safety and Good Practice, Conference proceedings, Solihull, June 1997. ERA Report 97-0533
10. Burke, J., Marshall, M., "Distribution System Neutral Grounding", Transmission and Distribution Conference and Exposition, 2001 IEEE/PES, Volume: 1 , 28 Oct.-2 Nov. 2001
11. Owen, E.L., "*The Historical Development of Neutral-Grounding Practices*", IEEE Industry Applications Magazine, March/April 1997

12. McDowell, G W A., “Generator Earthing”, Earthing Systems – which path to follow?”, Conference proceedings, Manchester, July 1993. ERA Report 93-0432
13. Sparks, R J., “Earthing for Power Systems”, Earthing Systems – which path to follow?” , Conference proceedings, Manchester, July 1993. ERA Report 93-0432
14. Smith, E., “Earthing Practices for Information Technology Equipment”, Earthing Systems – which path to follow?”, Conference proceedings, Manchester, July 1993. ERA Report 93-0432
15. Rogers, W J S., “Designing for safety in medium and low voltage electrical systems”, Earthing Solutions – Standards, Safety and Good Practice, Conference proceedings, Solihull, June 1997. ERA Report 97-0533
16. Frost, A C., “ Earthing and Bonding to the 16th Edition Wiring Regulations”, Earthing Systems – which path to follow?”, Conference proceedings, Manchester, July 1993. ERA Report 93-0432
17. Ryder, R.W., “*Earthing Principles and Practice*”, Sir. Isacc Pitman & Sons, LTD., London, 1952.

Appendix A: Earthing systems

1. TT system

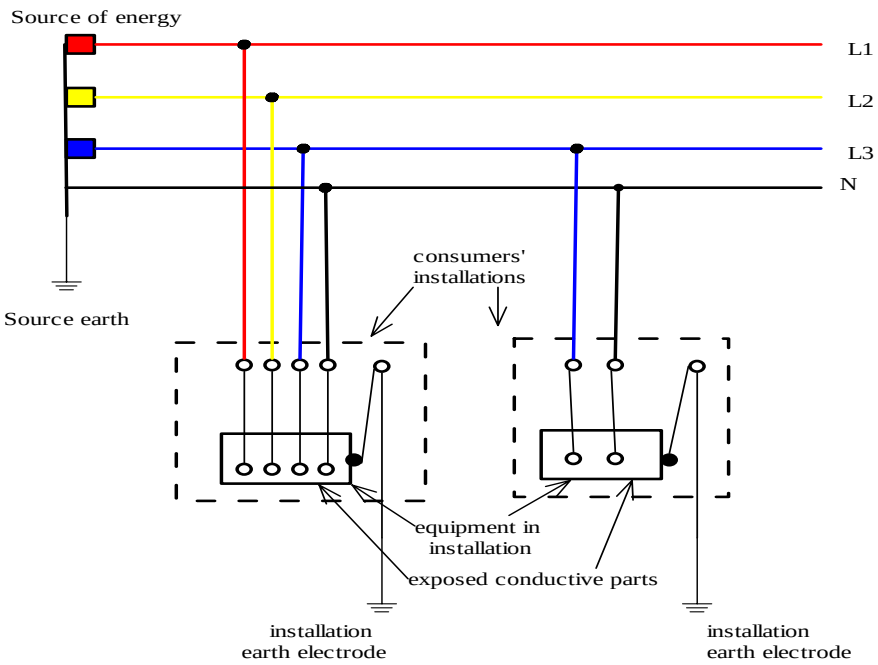

Figure A1: TT system

The supply source has a direct connection to earth. All exposed conductive parts of an installation also are connected to an earth electrode that is electrically independent of the source earth.

An example for a TT system is an overhead line supply with earth electrodes, and the mass of earth as a return path.

2. TN-C system

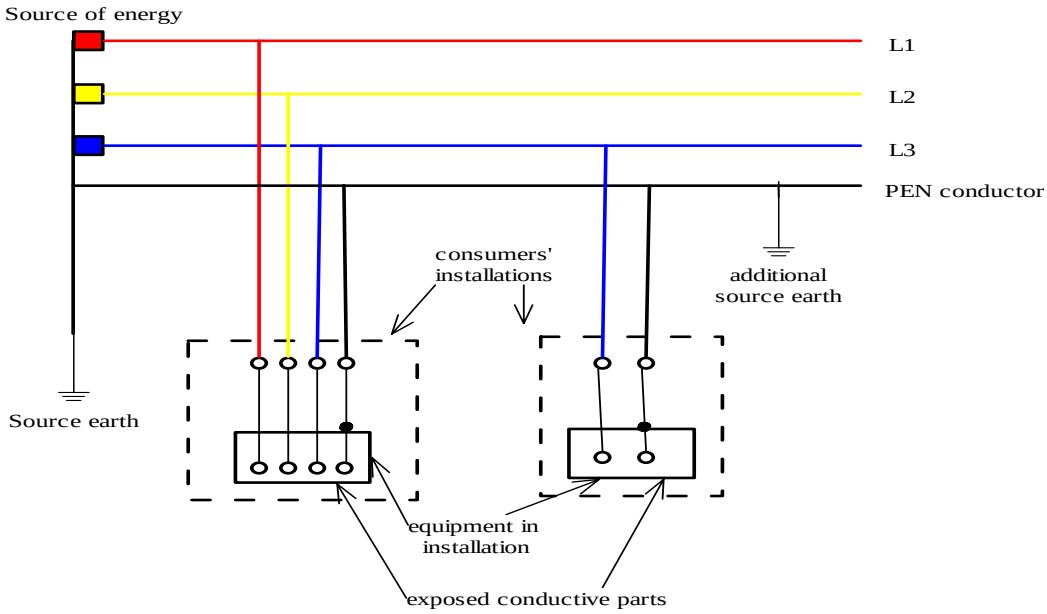

Figure A2: TN-C system

Neutral and Protective functions of a TN-C system are combined in a single conductor throughout the system. This combined earth/ neutral conductor is known as a PEN (Protective Earthed Neutral) conductor. The supply source is directly connected to earth and all exposed conductive parts of an installation are connected to the PEN conductor. An example for this type of system is earthed concentric wiring.

3. TN-S system

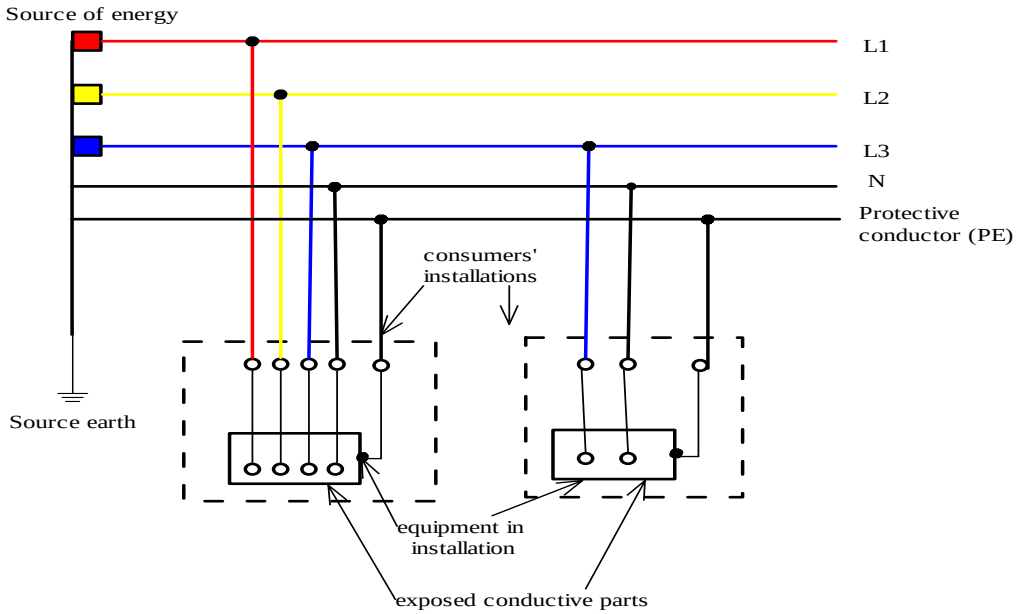

Figure A3: TN-S system

A TN-S system has separate neutral and protective conductors throughout the system. The supply source is directly connected to earth. All exposed conductive parts of an installation are connected to a Protective conductor (PE) via the main earthing terminal of the installation. The protective conductor is the metallic covering of the cable supplying the installation or a separate conductor.

4. TN-C-S system

Neutral and protective functions are combined in a single conductor in a part of the TN-C-S system. The usual form of this system is as illustrated below, where the supply is TN-C and the arrangement in the installation is TN-S. All exposed conductive parts of an installation are connected to the PEN conductor via the main earthing terminal and the neutral terminal, these terminals being linked together.

This type of distribution is also known as Protective Multiple Earthing (PME) and the PEN conductor is referred to as the Combined Neutral and Earth (CNE) conductor. The supply system PEN conductor is earthed at several points and an earth electrode may be necessary at or near a consumer's installation.

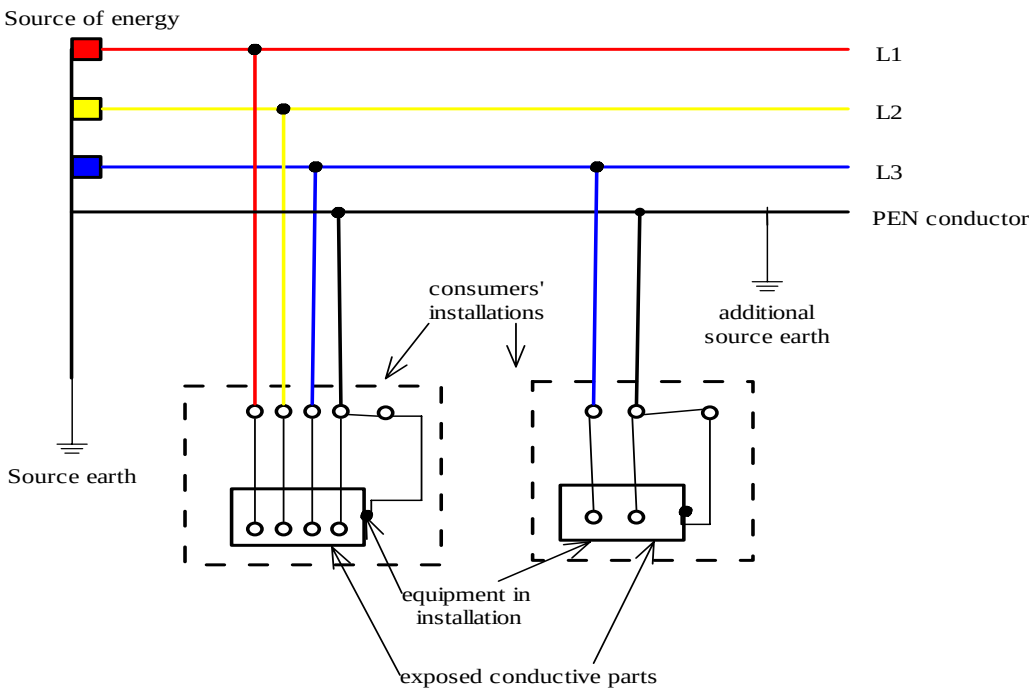

Figure A4: TN-C-S system

5. IT system

In an IT system, the source is either connected to earth through deliberately introduced earthing impedance or is isolated from earth. All exposed conductive parts of an installation are connected to an earth electrode.

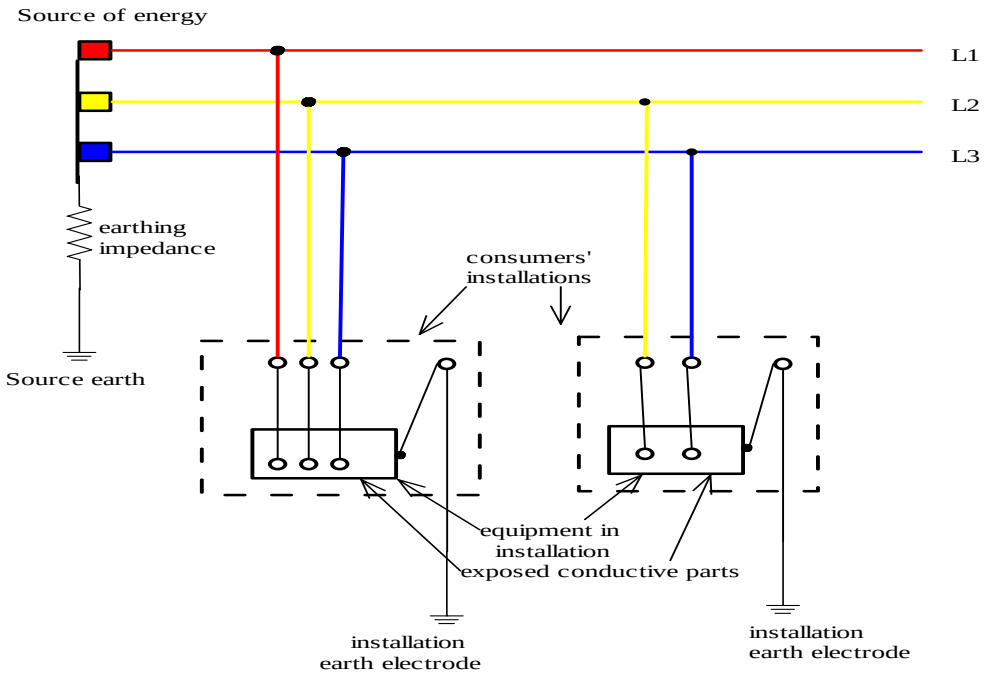

Figure A5: IT system

Appendix B : Regulation 413-02-04 of BS7671

"The characteristics of each protective device for automatic disconnection, the earthing arrangements for the installation and the relevant impedance of the circuit concerned shall be co-ordinated so that during an earth fault the voltages between simultaneously accessible exposed and extraneous-conductive-parts occurring anywhere in the installation shall be of such magnitude and duration as not to cause danger."

The conventional means of complying with Regulation 413-02-04 are given in IEE Regulations 413-02-06 to 413-02-26 and the most important points are summarised below.

- Either or both of the following protective devices shall be used for any type of earthing system.
  - i. An overcurrent protective device
  - ii. A residual current device (RCD)

<u>TN system</u>

- When a RCD is used in a TN-C-S system, a PEN conductor shall not be used on the load side. Instead protective conductor would be connected to the PEN conductor on the source side of the RCD
- To satisfy Regulation 413-02-04, following condition has to be fulfilled

$$Z_s \leq \frac{U_0}{I_a}$$

Where

Z_s = Earth fault loop impedance

I_a = Fault current

- Maximum disconnection times for a TN system are given in Table 1 (Table 41A / Regulation 413-02-09)

U_0 = Nominal voltage to earth

U_0 (volts)	Time (seconds)
120	0.8
220 to 277	0.4
400	0.2
>400	0.1

Table 1: Maximum disconnection times for a TN system

- If protection is provided by a RCD, following condition should be fulfilled

  $$Z_s * I_{\Delta n} \leq 50V$$

  Where

  $I_{\Delta n}$ = Rated residual operating current of the protective device (A)

TT system

- A RCD is preferred over an overcurrent protective device
- The following condition to be satisfied for each circuit

  $$R_A * I_a \leq 50V$$

  Where

  R_A = Sum of the resistances of the earth electrode and the protective conductors connecting it to the exposed conductive-part

  I_a = The current causing the automatic operation of the protective device within 5s. When a RCD is used, $I_a = I_{\Delta n}$

IT system

- Every exposed-conductive part shall be earthed to satisfy the following condition for each circuit

  $$R_b * I_d \leq 50V$$

  Where

  R_b = The resistances of the earth electrode for exposed conductive-parts

  I_d = Fault current which takes account of leakage currents and the total earthing impedance of the electrical installation

- For three-phase three-wire distribution (where neutral is not disturbed)

$$Z_s \leq \frac{0.866U_0}{I_a}$$

- For three-phase four-wire distribution and single phase distribution (where neutral is disturbed)

$$Z_s^1 \leq \frac{0.5U_0}{I_a}$$

Where

Z_s = Earth fault loop impedance comprising the phase conductor and the protective conductor

Z_s^1 = Earth fault loop impedance comprising the neutral conductor and the protective conductor

I_a = Fault current

- Maximum disconnection times for an IT system are given in Table 2 (Table 41E / Regulation 413-02-09 and 413-02-13)

Installation nominal voltage, U_0 (V)	Maximum disconnection time (s)	
	Neutral not disturbed	Neutral disturbed
120	0.8	5.0
220 to 277	0.4	0.8
400	0.2	0.4
580	0.1	0.2

Table 2: Maximum disconnection time in IT systems (second fault)

Appendix C : Electricity Safety, Quality and Continuity Regulations 2002 (ESQ&C2002)

PART II

PROTECTION AND EARTHING

Electrical protection

6. A generator or distributor shall be responsible for the application of such protective devices to his network as will, so far as is reasonably practicable, prevent any current, including any leakage to earth, from flowing in any part of his network for such a period that that part of his network can no longer carry that current without danger.

Continuity of the supply neutral conductor and earthing connections

7. (1) A generator or distributor shall, in the design, construction, maintenance or operation of his network, take all reasonable precautions to ensure continuity of the supply neutral conductor.

(2) No generator or distributor shall introduce or retain any protective device in any supply neutral conductor or any earthing connection of a low voltage network which he owns or operates.

General requirements for connection with earth

8. (1) A generator or distributor shall ensure that, so far as is reasonably practicable, his network does not become disconnected from earth in the event of any foreseeable current due to a fault.

(2) A generator or distributor shall, in respect of any high voltage network which he owns or operates, ensure that -

(a) the network is connected with earth at, or as near as is reasonably practicable to, the source of voltage but where there is more than one source of voltage in that network, the connection with earth need only be made at one such point;

(b) the earth electrodes are designed, installed and used in such a manner so as to prevent danger occurring in any low voltage network as a result of any fault in the high voltage network; and

(c) where the network is connected with earth through a continuously rated arc suppression coil, an automatic warning is given to the generator or distributor (as the case may be) of any fault which causes the arc suppression coil to operate.

(3) A generator or distributor shall, in respect of any low voltage network which he owns or operates, ensure that -

(a) the outer conductor of any electric line which has concentric conductors is connected with earth;

(b) every supply neutral conductor is connected with earth at, or as near as is reasonably practicable to, the source of voltage except that where there is only one point in a network at which consumer's installations are connected to a single source of voltage, that connection may be made at that point, or at another point nearer to the source of voltage; and

(c) no impedance is inserted in any connection with earth of a low voltage network other than that required for the operation of switching devices or of instruments or equipment for control, telemetry or metering.

(4) A consumer shall not combine the neutral and protective functions in a single conductor in his consumer's installation.

(5) Paragraphs (1) to (3) shall not apply to a network which is situated within a generating station if, and only if, adequate alternative arrangements are in place to prevent danger.

Protective multiple earthing

9. (1) This regulation applies to distributors' low voltage networks in which the neutral and protective functions are combined.

(2) In addition to the neutral with earth connection required under regulation 8(3)(b) a distributor shall ensure that the supply neutral conductor is connected with earth at -

(a) a point no closer to the distributor's source of voltage (as measured along the distributing main) than the junction between that distributing main and the service line which is most remote from the source; and

(b) such other points as may be necessary to prevent, so far as is reasonably practicable, the risk of danger arising from the supply neutral conductor becoming open circuit.

(3) Paragraph (2)(a) shall only apply where the supply neutral conductor of the service line referred to in paragraph (2)(a) is connected to the protective conductor of a consumer's installation.

(4) The distributor shall not connect his combined neutral and protective conductor to any metalwork in a caravan or boat.

Earthing of metalwork

10. (1) Subject to paragraph (2), and without prejudice to any other requirement as to earthing, a generator, distributor or meter operator, as the case may be, shall ensure that any metalwork enclosing, supporting or otherwise associated with his equipment in a network and which is not intended to serve as a phase conductor is, where necessary to prevent danger, connected with earth. (2) Paragraph (1) shall not apply -

(a) to any metalwork attached to, or forming part of, a wooden pole support, the design and construction of which is such as to prevent, so far as is reasonably practicable, danger within 3 metres of the ground from any failure of insulation or failure of insulators; or

(b) to any wall-mounted metal bracket carrying an overhead line not connected with earth, where the line is both supported by an insulator and the part of the line in contact with the insulator is itself surrounded by insulation.